NIOB FLUID

PRODUCER OF STAINLESS PIPING SYSTEMS

08

DOUBLE - WALLED PIPING SYSTEMS

www.niobfluid.cz

02/2021

NIOB FLUID

Double - Walled Piping Systems

NIOB FLUID

Double - Walled Piping Systems

Heated fittings in the food processing industry must be used in the operations, where the transported food material contains substances (fats), which set solid at common room temperatures, or which feature high viscosity, which prevents their transport through piping at temperatures approximately 20°C.

The heated fittings are classified to two groups:

- Heated sections of piping (pipes, bends, T-parts)

- Heated control fittings (flaps, ball valves) and special sections of piping, such as filters.

All fittings with heating feature double housing, through which the hot water passes. The water goes to the heated space through the connecting fittings, usually sleeves (G 3/8“, G 1/2“ or G 3/4“). The outer housing features always two connecting fittings (usually sleeves), one for inlet and one for outlet of the hot water, to enable flow of the hot water along the heated section of the piping.

For connection of the hot water, the heated fittings of sizes DN 25 - DN 32 use the connection fittings of clearance G 3/8“, sizes DN 40 - DN 65 use the connection fittings of clearance G 1/2“, and the fittings of the nominal size DN 80 - DN 100 use the connection fittings of clearance G 3/4“.

TUBES

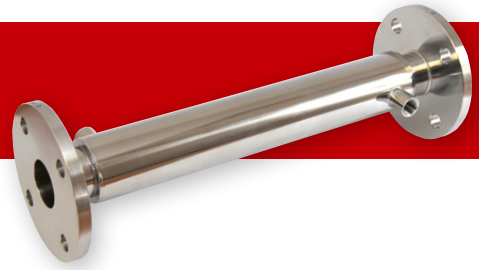

DIN

10010-H Tube S - S

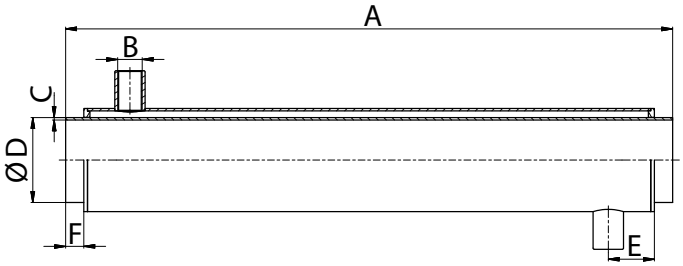

Dimensions

DN	A	B	C	D	E	F
25	200 - 6000	3/8"	1,5	29	38	15
32		3/8"	1,5	35	38	15
40		1/2"	1,5	41	38	15
50		1/2"	1,5	53	38	15
65		1/2"	2	70	38	15
80		3/4"	2	85	38	15
100		3/4"	2	104	38	15

10020-H Tube KM - G

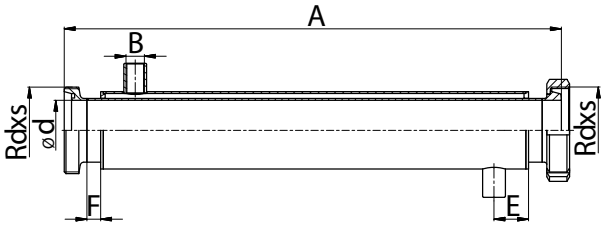

Dimensions

DN	A	B	C	D	E	F	Rdxs
25	200 - 6000	3/8"	1,5	29	38	15	52x1/6"
32		3/8"	1,5	35	38	15	58x1/6"
40		1/2"	1,5	41	38	15	65x1/6"
50		1/2"	1,5	53	38	15	78x1/6"
65		1/2"	2	70	38	15	95x1/6"
80		3/4"	2	85	38	15	110x1/4"
100		3/4"	2	104	38	15	130x1/4"

10040-H Tube PN - PN

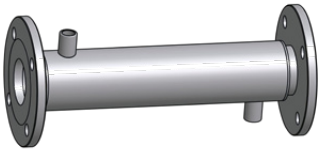

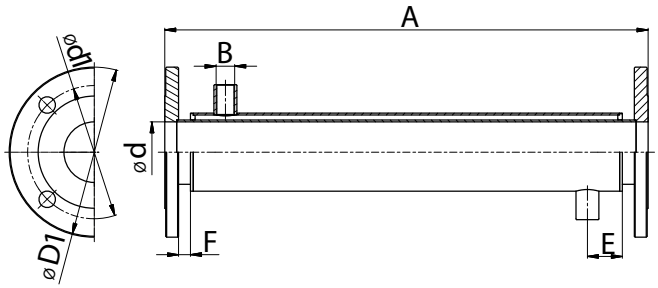

Dimensions

DN	A	B	d	d1	D1	E	F
25	200-6000	3/8"	26	84x4	115	38	13
32		3/8"	32	100x4	140	38	13
40		1/2"	38	110x4	150	38	13
50		1/2"	50	125x4	165	38	13
65		1/2"	66	145x4	185	38	13
80		3/4"	81	160x8	200	38	13
100		3/4"	100	180x8	220	38	13

10050-H Tube C - C

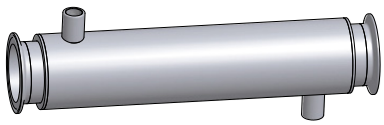

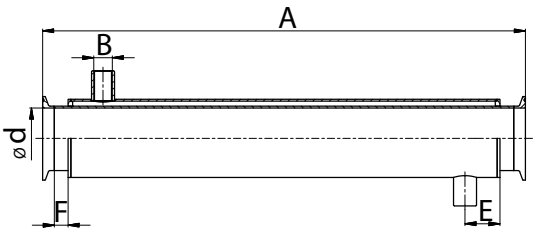

Dimensions

DN	A	B	C	d	E	F
25	200 - 6000	3/8"	1,5	29	38	15
32		3/8"	1,5	35	38	15
40		1/2"	1,5	41	38	15
50		1/2"	1,5	53	38	15
65		1/2"	2	70	38	15
80		3/4"	2	85	38	15
100		3/4"	2	104	38	15

BEND

DIN

30010-H Bend S - S

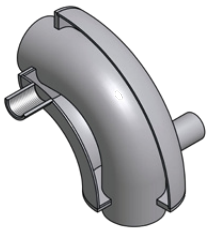

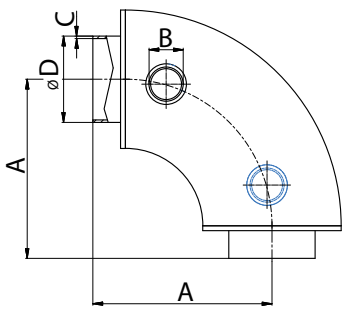

Dimensions

DN	A	B	C	D
25	90	3/8"	1,5	29
32	95	3/8"	1,5	35
40	100	1/2"	1,5	41
50	110	1/2"	1,5	53
65	120	1/2"	2	70
80	145	3/4"	2	85
100	155	3/4"	2	104

30021-H Bend KM - G

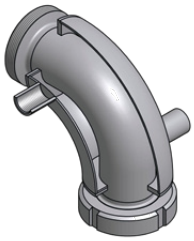

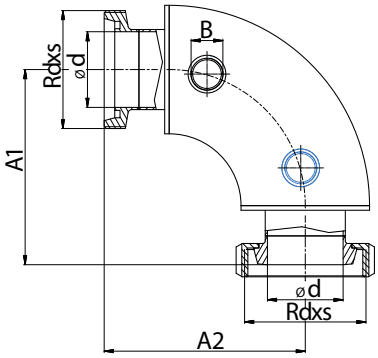

Dimensions

DN	A1	A2	Rdxs	B	d
25	108	112	52x1/6"	3/8"	26
32	113	117	58x1/6"	3/8"	32
40	118	122	65x1/6"	1/2"	38
50	129	133	78x1/6"	1/2"	50
65	141	145	95x1/6"	1/2"	66
80	166	170	110x1/4"	3/4"	81
100	180	185	130x1/4"	3/4"	100

30040-H Bend PN - PN

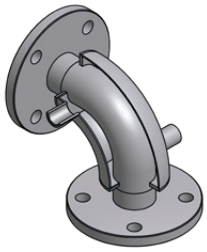

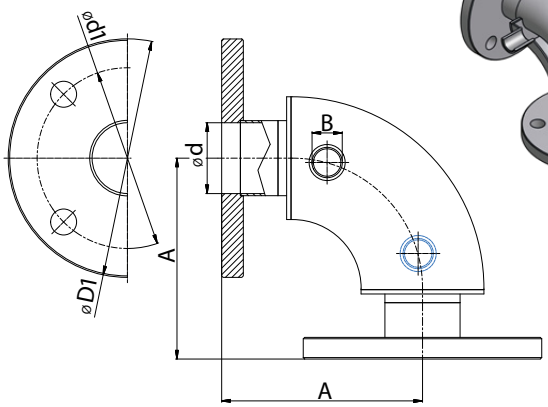

Dimensions

DN	A	B	d	d1	D
25	104	3/8"	26	85x4	115
32	109	3/8"	32	100x4	140
40	114	1/2"	38	110x4	150
50	126	1/2"	50	125x4	165
65	136	1/2"	66	145x4	185
80	163	3/4"	81	160x8	200
100	173	3/4"	100	180x8	220

30050-H Bend C - C

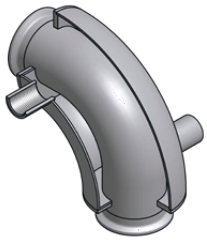

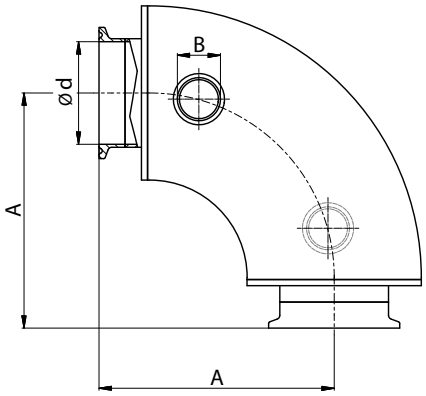

Dimensions

DN	A	B	d
25	102,7	3/8"	26
32	107,7	3/8"	32
40	112,7	1/2"	38
50	122,7	1/2"	50
65	132,7	1/2"	66
80	157,7	3/4"	81
100	170,8	3/4"	100

TEE

DIN

30410-H Tee S - S - S

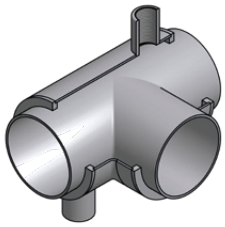

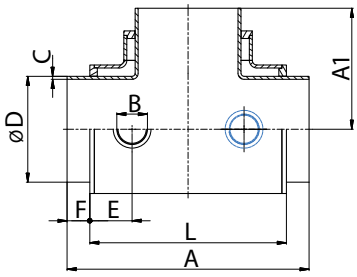

Dimensions

DN	A	A1	B	C	D	E	F	L
25	100	50	3/8"	1,5	29	23	15	70
32	110	55	3/8"	1,5	35	23	15	80
40	120	60	1/2"	1,5	41	23	15	90
50	140	70	1/2"	1,5	53	23	15	110
65	160	80	1/2"	2	70	23	15	130
80	180	90	3/4"	2	85	23	15	150
100	200	100	3/4"	2	104	23	15	170

30423-H Tee G - KM - G

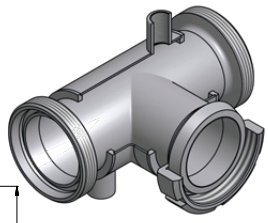

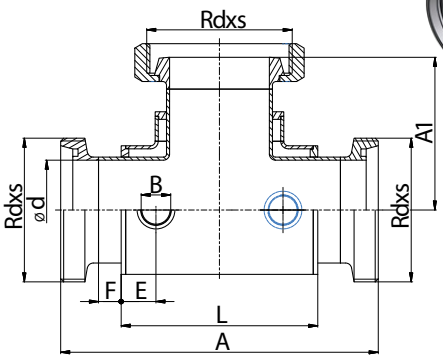

Dimensions

DN	A	A1	B	C	D	E	F	L
25	100	50	3/8"	1,5	29	23	15	70
32	110	55	3/8"	1,5	35	23	15	80
40	120	60	1/2"	1,5	41	23	15	90
50	140	70	1/2"	1,5	53	23	15	110
65	160	80	1/2"	2	70	23	15	130
80	180	90	3/4"	2	85	23	15	150
100	200	100	3/4"	2	104	23	15	170

30435-H Tee PN - PN - PN

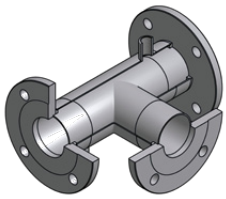

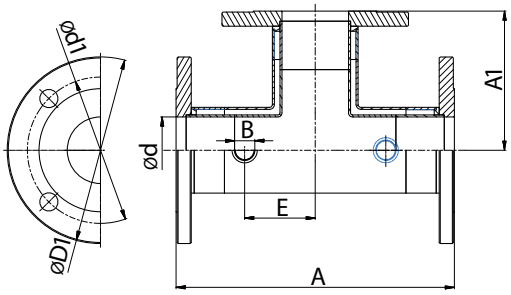

Dimensions

DN	A	A1	B	d	d1	D1	E
25	144	68	3/8"	26	85x4	115	40
32	154	73	3/8"	32	100x4	140	50
40	164	78	1/2"	38	110x4	150	60
50	186	89	1/2"	50	125x4	165	60
65	210	101	1/2"	66	145x4	185	70
80	230	111	3/4"	81	160x8	200	75
100	260	125	3/4"	100	180x8	220	132

30454-H Tee C - C - C

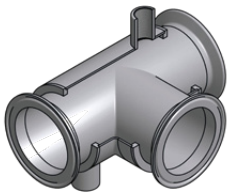

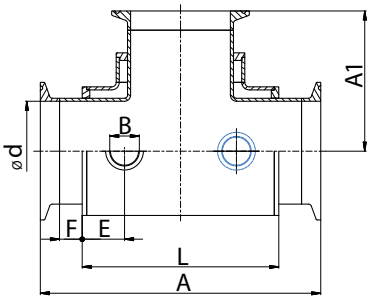

Dimensions

DN	A	A1	B	d	E	F	L
25	125,4	62,7	3/8"	26	23	15	70
32	135,4	67,7	3/8"	32	23	15	80
40	145,4	72,7	1/2"	38	23	15	90
50	165,4	82,7	1/2"	50	23	15	110
65	185,4	92,7	1/2"	66	23	15	130
80	205,4	102,7	3/4"	81	23	15	150
100	231,6	115,8	3/4"	100	23	15	170

DOUBLE - WALLED PIPING SYSTEMS

DIN

30620-H Reducing piece concentric S - S

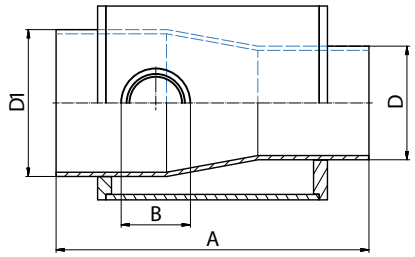

Dimensions

DN	A	D1	D
32/25	80	3/8´	29
40/25	102	1/2´	29
40/32	88	1/2´	35
50/25	115	1/2´	29
50/32	129	1/2´	35
65/32	125	1/2´	35
65/40	120	1/2´	41
65/50	130	1/2´	53

Dimensions

DN	A	D1	D
80/40	140	3/4´	41
80/50	125	3/4´	53
80/65	120	3/4´	70
100/50	160	3/4´	53
100/65	127	3/4´	70
100/85	120	3/4´	85

4021H Three way ball cock G - G - G

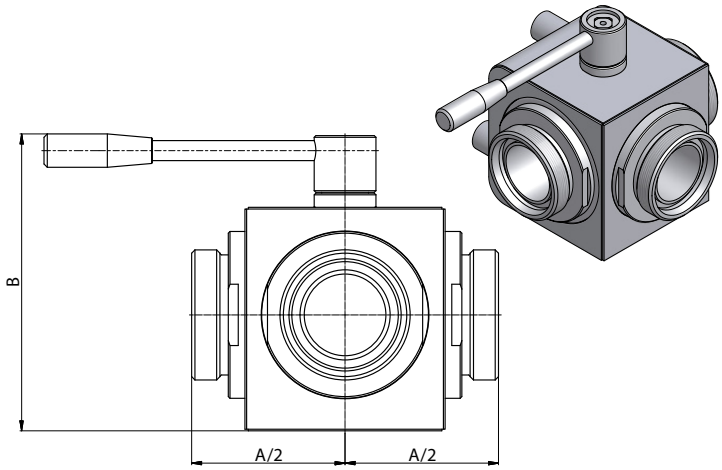

Dimensions

DN	A/2	B	Connection
50	92	178	Muff 1/2"
65	100	208	Muff 1/2"
80	128	252,5	Muff 3/4"

30810-H Tee reduced long S - S - S

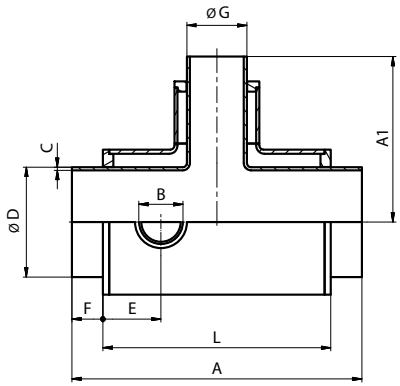

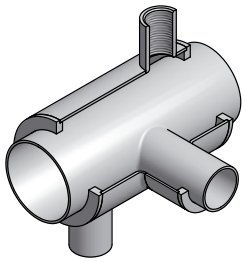

Dimensions

DN	A	A1	B	C	D	E	F	G	L
32/25	110	55	3/8"	1,5	35	23	15	29	74
40/15	120	60	1/2"	1,5	41	23	15	19	84
40/20	120	60	1/2"	1,5	41	23	15	23	84
40/25	120	60	1/2"	1,5	41	23	15	29	84
40/32	120	60	1/2"	1,5	41	23	15	35	84
50/20	140	70	1/2"	1,5	53	23	15	23	104
50/25	140	70	1/2"	1,5	53	23	15	29	104
50/32	140	70	1/2"	1,5	53	23	15	35	104
50/40	140	70	1/2"	1,5	53	23	15	41	104
65/25	160	80	1/2"	2,0	70	23	15	29	124
65/32	160	80	1/2"	2,0	70	23	15	35	124
65/40	160	80	1/2"	2,0	70	23	15	41	124
65/50	160	80	1/2"	2,0	70	23	15	53	124
80/40	180	80	3/4"	2,0	85	23	15	41	144
80/50	180	80	3/4"	2,0	85	23	15	53	144
80/65	180	80	3/4"	2,0	85	23	15	70	144
100/50	200	100	3/4"	2,0	104	23	15	53	164
100/65	200	100	3/4"	2,0	104	23	15	70	164
100/80	200	100	3/4"	2,0	104	23	15	85	164

BALL COCK

DIN

4051H Ball cock S - S

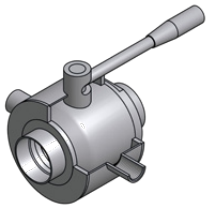

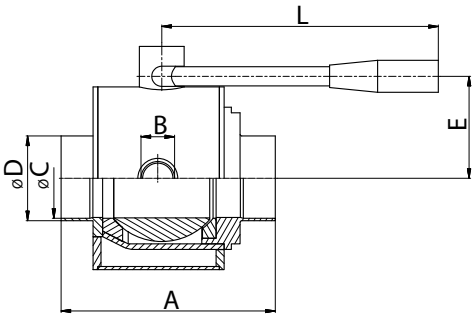

Dimensions

DN	A	B	C	D	E	L
25	86	3/8"	26	31	44	117
32	109	3/8"	32	37	50	146
40	124	1/2"	38	43	64	185
50	135	1/2"	50	55	68	185
65	161	1/2"	66	72	95	243
80	180	3/4"	81	87	104	243
100	204	3/4"	100	106	122	273

4053H Ball cock G - G

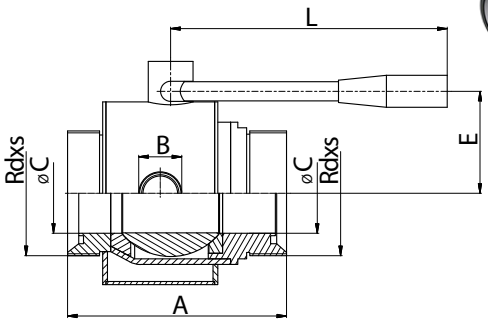

Dimensions

DN	A	B	C	Rdxs	E	L
25	97	3/8"	26	52x1/6"	44	146
32	113	3/8"	32	58x1/6"	50	146
40	127	1/2"	38	65x1/6"	64	185
50	134	1/2"	50	78x1/6"	68	185
65	161	1/2"	66	95x1/6"	95	243
80	180	3/4"	81	110x1/4"	104	243
100	204	3/4"	100	130x1/4"	122	273

4055H Ball cock G - MK

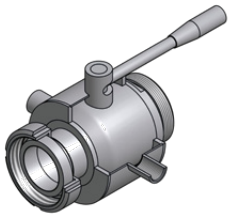

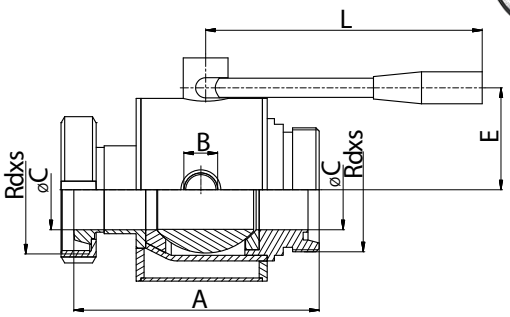

Dimensions

DN	A	B	C	Rdxs	E	L
25	92	3/8"	26	52x1/6"	44	146
32	109	3/8"	32	58x1/6"	50	146
40	127	1/2"	38	65x1/6"	64	185
50	137	1/2"	50	78x1/6"	68	185
65	161	1/2"	66	95x1/6"	95	243
80	180	3/4"	81	110x1/4"	104	243
100	204	3/4"	100	130x1/4"	122	273

4051H-P05 / P10

Ball cock with pneumatic actuator

BUTTERFLY VALVE

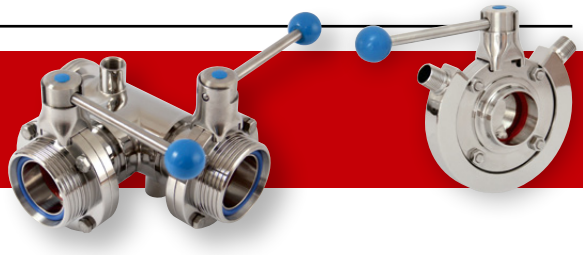

DIN

43010-HA Butterfly valve S - S

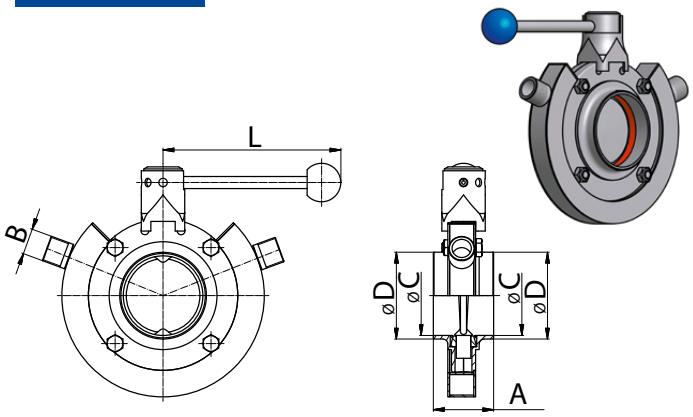

Dimensions

DN	A	B	C	D	L
25	40	3/8"	26	31	102,5
32	42	3/8"	32	37	102,5
40	50	1/2"	38	43	147,5
50	50	1/2"	50	55	147,5
65	50	1/2"	66	72	147,5
80	60	3/4"	81	87	180
100	64	3/4"	100	106	180

43030-HA Butterfly valve G - G

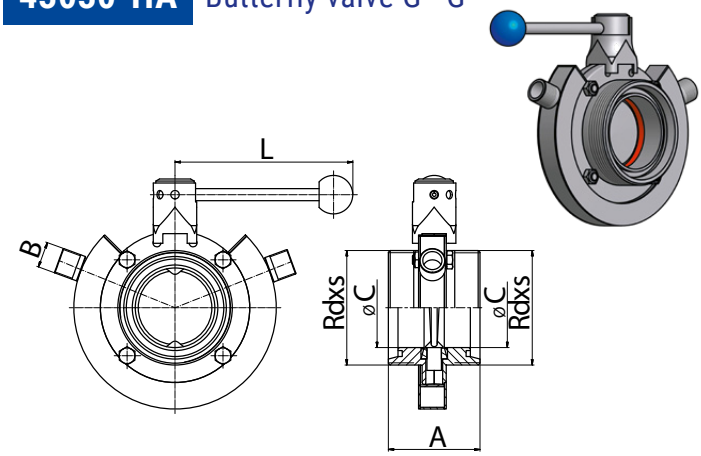

Dimensions

DN	A	B	C	Rdxs	L
25	63	3/8"	26	52x1/6"	102,5
32	64	3/8"	32	58x1/6"	102,5
40	72	1/2"	38	65x1/6"	147,5
50	72	1/2"	50	78x1/6"	147,5
65	76	1/2"	66	95x1/6"	147,5
80	100	3/4"	81	110x1/4"	180
100	104	3/4"	100	130x1/4"	180

43040-HA Butterfly valve G - KM

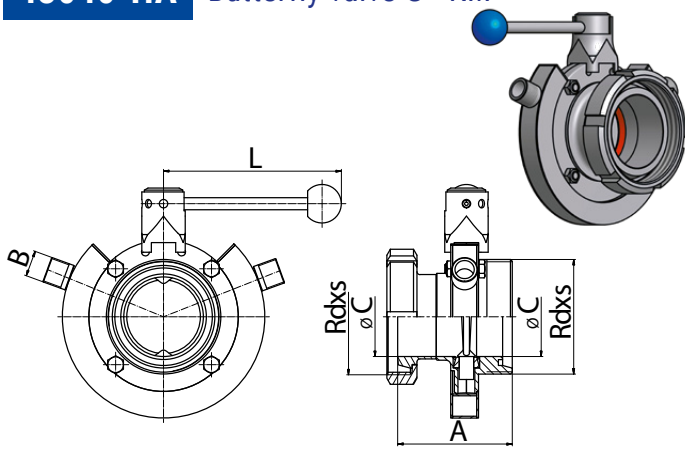

Dimensions

DN	A	B	C	Rdxs	L
25	74	3/8"	26	52x1/6"	102,5
32	78	3/8"	32	58x1/6"	102,5
40	87	1/2"	38	65x1/6"	147,5
50	89	1/2"	50	78x1/6"	147,5
65	95	1/2"	66	95x1/6"	147,5
80	117	3/4"	81	110x1/4"	180
100	128	3/4"	100	130x1/4"	180

Type of conection

43010 - H **A** - 050

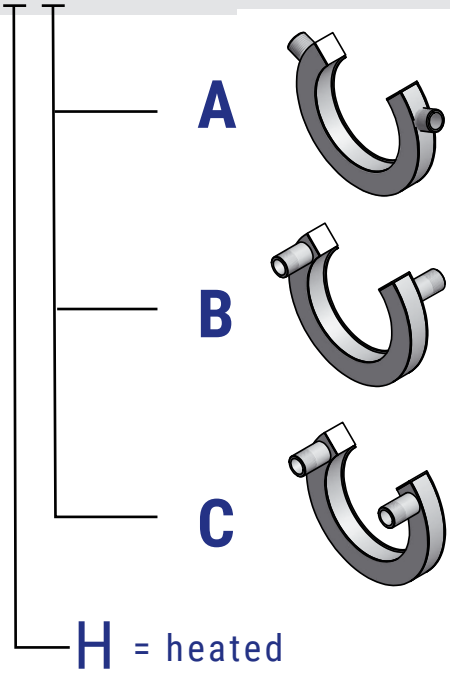

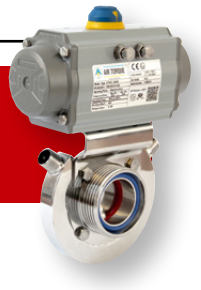

BUTTERFLY VALVE WITH PNEUMATIC ACTUATOR

DIN

43010-HA-P05 / P10

Butterfly valve S - S
with pneumatic actuator - horizontal

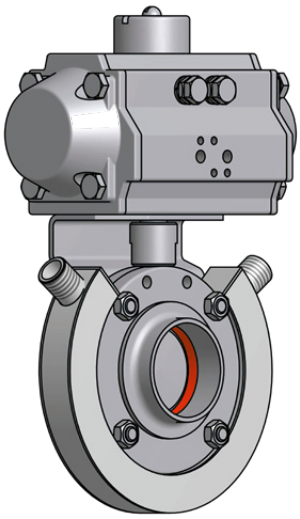

43030HA-P05 / P10

Butterfly valve G - G
with pneumatic actuator - horizontal

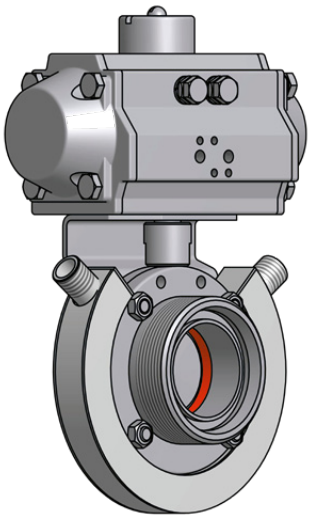

43040-HA-P05 / P10

Butterfly valve G - KM
with pneumatic actuator - horizontal

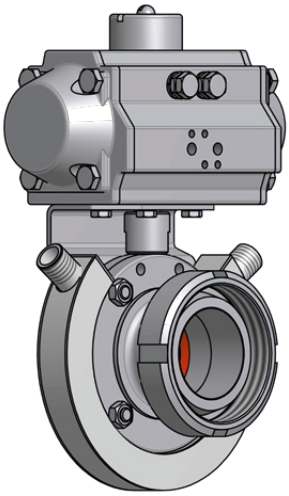

43150-HA

Three way butterfly valve G - G - G

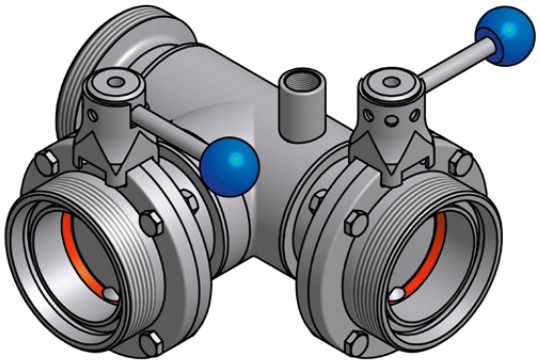

BUTTERFLY VALVE WITH PNEUMATIC ACTUATOR

DIN

43010-HA-P15 / P20

Butterfly valve S - S
with pneumatic actuator - vertical

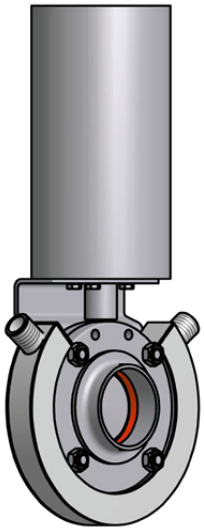

43030-HA-P15 / P20

Butterfly valve G - G
with pneumatic actuator - vertical

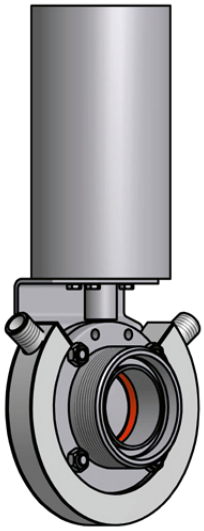

43040-HA-P15 / P20

Butterfly valve G - KM
with pneumatic actuator - vertical

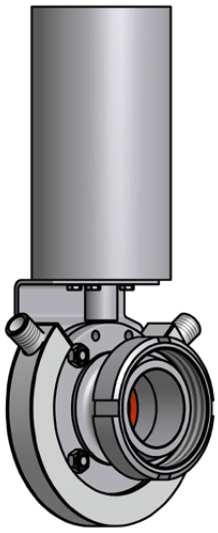

NON RETURN VALVE

DIN

5080D-H Non return valve S - S

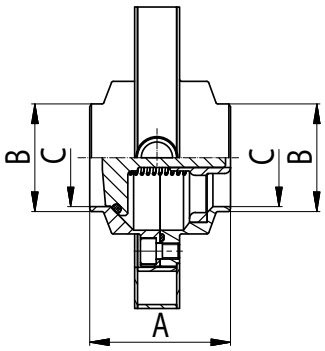

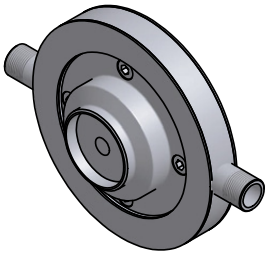

Dimensions

DN	A	B	C
25	64	31	26
32	66	37	32
40	72	43	38
50	72	55	50
65	76	72	66
80	96	87	81
100	104	106	100

5083D-H Non return valve G - G

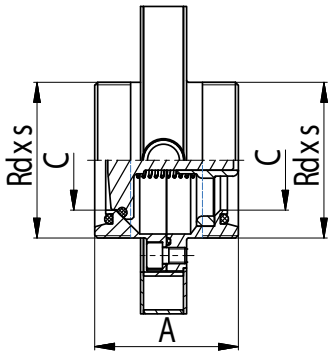

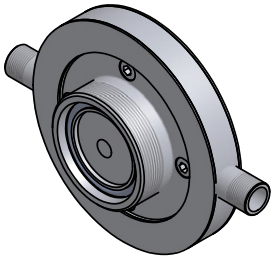

Dimensions

DN	A	C	Rdxs
25	64	26	52x1/6"
32	66	32	58x1/6"
40	72	38	65x1/6"
50	72	50	78x1/6"
65	76	66	95x1/6"
80	96	81	110x1/4"
100	104	100	130x1/4"

5084D-H Non return valve G - KM

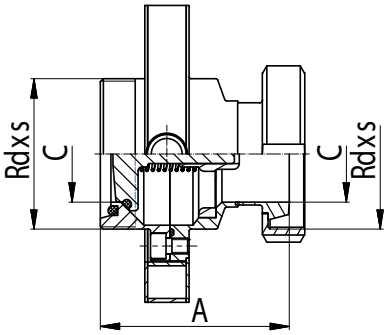

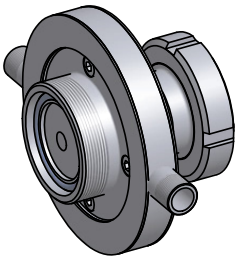

Dimensions

DN	A	C	Rdxs
25	84	26	52x1/6"
32	89	32	58x1/6"
40	96	38	65x1/6"
50	98	50	78x1/6"
65	106	66	95x1/6"
80	131	81	110x1/4"
100	146	100	130x1/4"

5089D-H Non return valve C - C

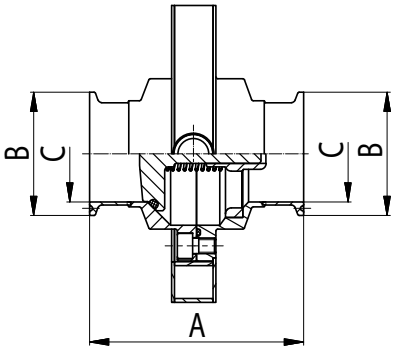

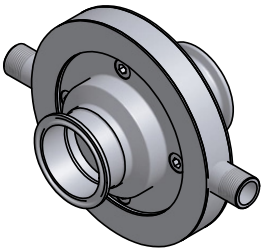

Dimensions

DN	A	B	C
25	103	50,5	26
32	105	50,5	32
40	111	50,5	38
50	111	65	50
65	128	91	66
80	148	106	81
100	156	119	100

FILTER

DIN

5350H Tubular filter S - S

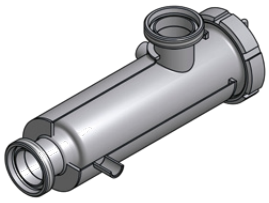

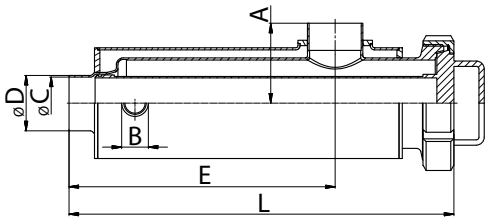

Dimensions

DN	A	B	C	D	E	L
25	55	3/8"	26	29	222	318
32	65	3/8"	32	35	227	332
40	75	1/2"	38	41	245	356
50	75	1/2"	50	53	250	356
65	85	1/2"	66	70	265	383
80	100	3/4"	81	85	335	542
100	115	3/4"	100	104	345	571

5351H Tubular filter G - G

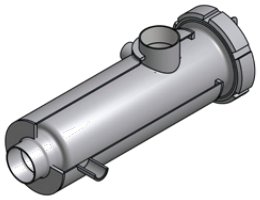

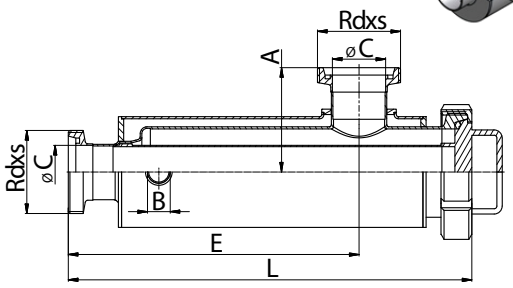

Dimensions

DN	A	B	C	Rdxs	E	L
25	77	3/8"	26	52x1/6"	244	340
32	87	3/8"	32	58x1/6"	249	354
40	97	1/2"	38	65x1/6"	267	378
50	98	1/2"	50	78x1/6"	273	379
65	110	1/2"	66	95x1/6"	290	408
80	125	3/4"	81	110x1/4"	360	567
100	145	3/4"	100	130x1/4"	375	601

5355H Tubular filter G - KM

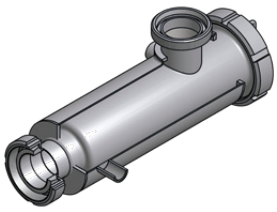

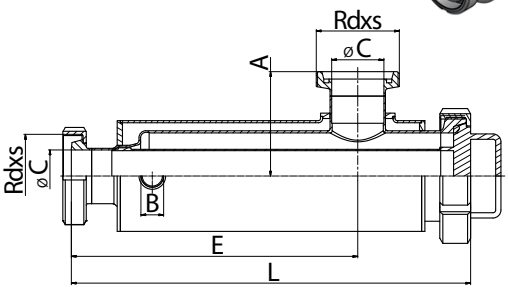

Dimensions

DN	A	B	C	Rdxs	E	L
25	77	3/8"	26	52x1/6"	244	340
32	87	3/8"	32	58x1/6"	249	354
40	97	1/2"	38	65x1/6"	267	378
50	98	1/2"	50	78x1/6"	273	379
65	110	1/2"	66	95x1/6"	290	408
80	125	3/4"	81	110x1/4"	360	567
100	145	3/4"	100	130x1/4"	375	601

5356H Tubular filter KM - KM

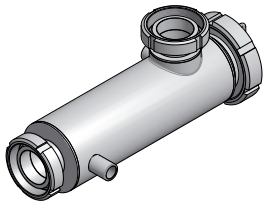

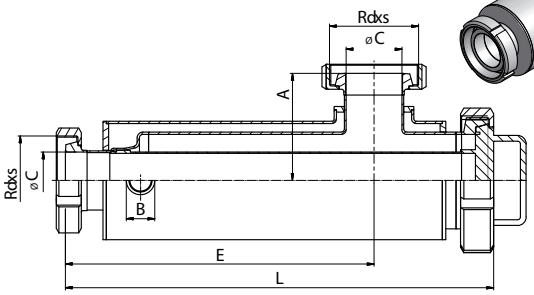

Dimensions

DN	A	B	C	Rdxs	E	L
25	70	3/8"	26	52x1/6"	240	336
32	80	3/8"	32	58x1/6"	245	350
40	90	1/2"	38	65x1/6"	263	374
50	91	1/2"	50	78x1/6"	269	375
65	102	1/2"	66	95x1/6"	286	404
80	117	3/4"	81	110x1/4"	356	563
100	135	3/4"	100	130x1/4"	370	596

BEND

TEE

SMS

31010-H Bend S - S

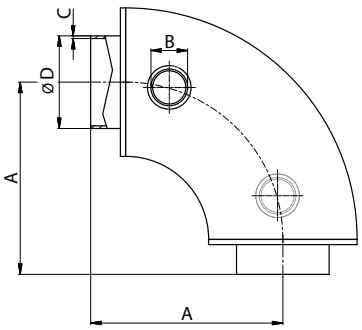

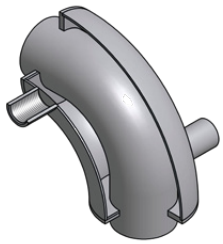

Dimensions

DN	A	B	C	D
25	88	3/8"	1,25	25
35	90	3/8"	1,25	38
51	110	1/2"	1,25	51
63,5	115	1/2"	1,5	63,5
76	130	3/4"	1,6	76,1
101,6	150	3/4"	2	101,6

31410-H Tee long S - S - S

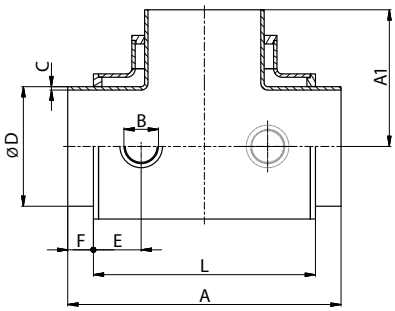

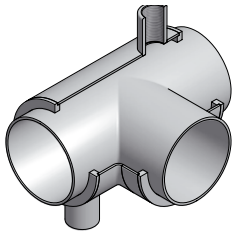

Dimensions

DN	A	A1	B	C	D	L
25	110	55	3/8"	1,25	25	74
35	140	70	3/8"	1,25	38	104
51	164	82	1/2"	1,25	51	128
63,5	210	105	1/2"	1,5	63,5	174
76	220	110	3/4"	1,6	76,1	186
101,6	300	150	3/4"	2	101,6	264

BUTTERFLY VALVE

SMS

46010-HA Butterfly valve S - S

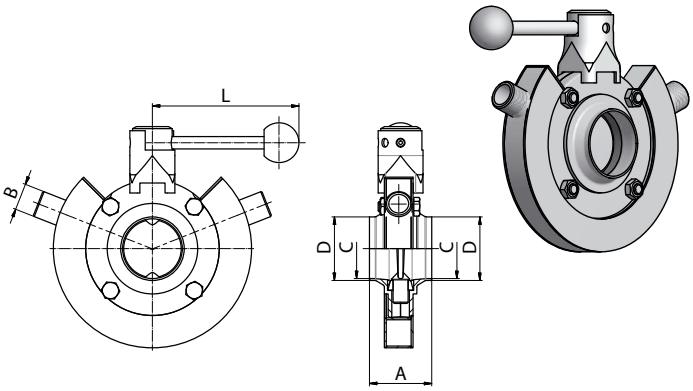

Dimensions

DN	A	B	C	D	L
25	40	3/8"	22	25	102,5
38	42	3/8"	35	38	102,5
51	50	1/2"	48	51	147,5
63,5	50	1/2"	60,5	63,5	147,5
76,1	60	3/4"	72,1	76,1	180
101,6	64	3/4"	97,6	101,6	180
100	64	3/4"	100	106	180

46040-HA Butterfly valve G - G

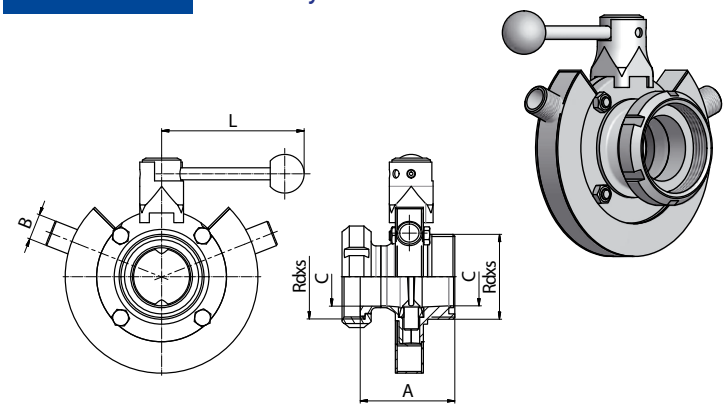

Dimensions

DN	A	B	C	Rdxs	L
25	64	3/8"	22	40x1/6"	102,5
38	72	3/8"	35	60x1/6"	102,5
51	72	1/2"	48	70x1/6"	147,5
63,5	76	1/2"	60,5	85x1/6"	147,5
76,1	100	3/4"	72,1	98x1/6"	180
101,6	104	3/4"	97,6	125x1/4"	180

46030-HA Butterfly valve G - G

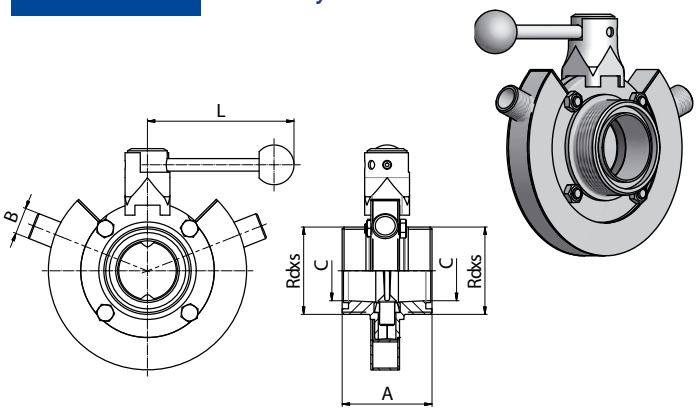

Dimensions

DN	A	B	C	Rdxs	L
25	64	3/8"	22	40x1/6"	102,5
38	72	3/8"	35	60x1/6"	102,5
51	72	1/2"	48	70x1/6"	147,5
63,5	76	1/2"	60,5	85x1/6"	147,5
76,1	100	3/4"	72,1	98x1/6"	180
101,6	104	3/4"	97,6	125x1/4"	180

Type of conection

46010 - H **A** - 050

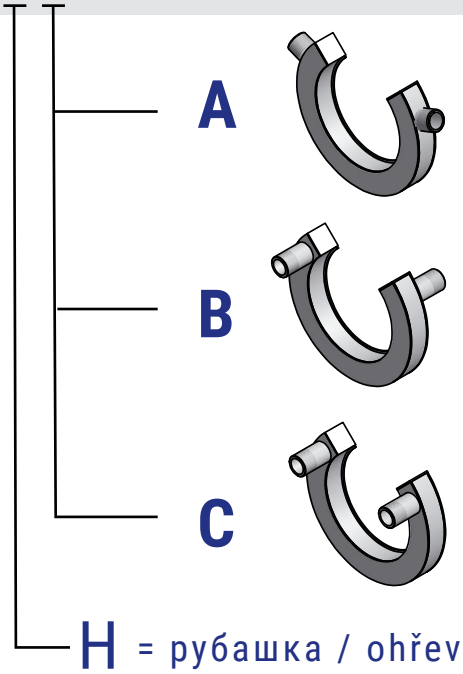

NON RETURN VALVE

SMS

5060D-H Non return valve S - S

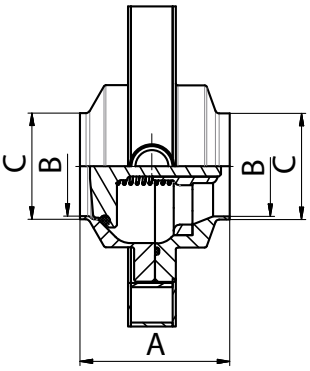

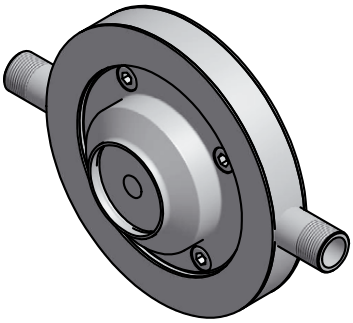

Dimensions

DN	A	B	C
25	64	25	22,5
38	72	38	35,5
51	72	51	48
63,5	76	63,5	60,5

5064D-H Non return valve G - KM

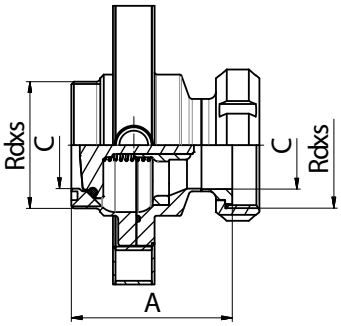

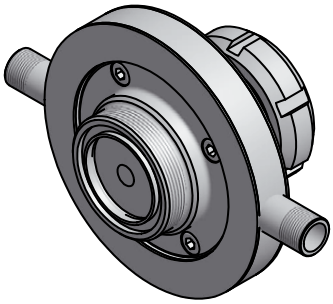

Dimensions

DN	A	C	Rdxs
25	64	22,5	40x1/6
38	72	35,5	60x1/6
51	72	48	70x1/6
63,5	76	60,5	85x1/6

5063D-H Non return valve G - G

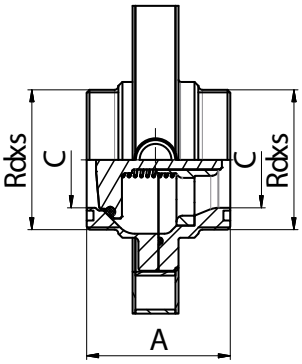

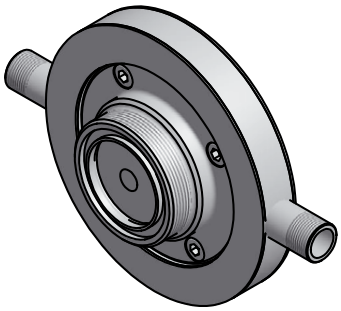

Dimensions

DN	A	C	Rdxs
25	64	22,5	40x1/6
38	72	35,5	60x1/6
51	72	48	70x1/6
63,5	76	60,5	85x1/6

5069D-H Non return valve C - C

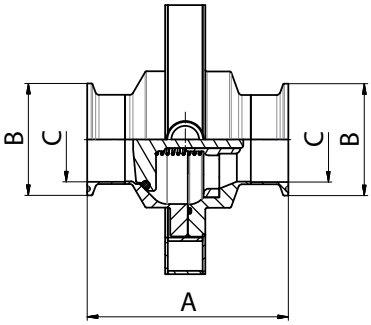

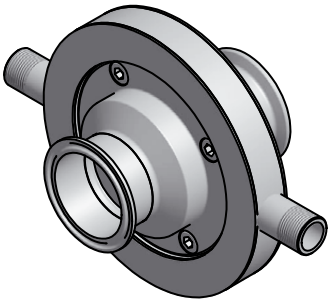

Dimensions

DN	A	B	C
25	64	50,5	22,5
38	72	50,5	35,5
51	72	64	48
63,5	76	77,5	60,5

FILTER

SMS

53461-H Tubular filter S - S

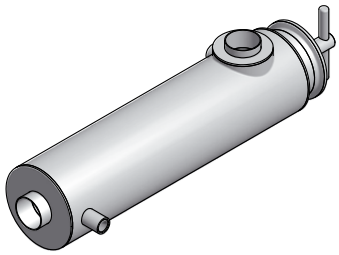

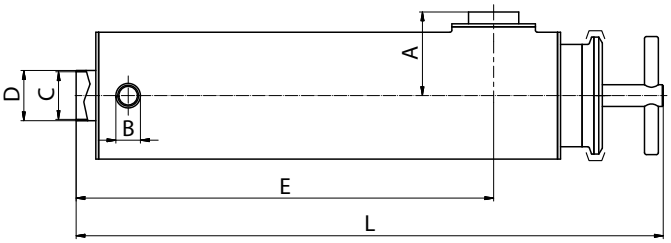

Dimensions

DN	A	B	C	D	E	L
51	85	1/2"	48,5	51	424,5	596,9

53463-H Tubular filter KM - G

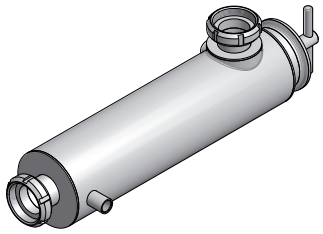

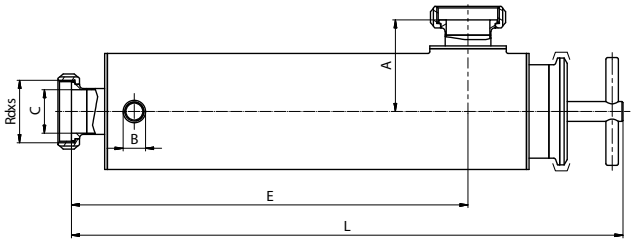

Dimensions

DN	A	B	C	Rdxs	E	L
51	102	1/2"	48,5	70x1/6"	441,5	613,3

53462-H Tubular filter G - G

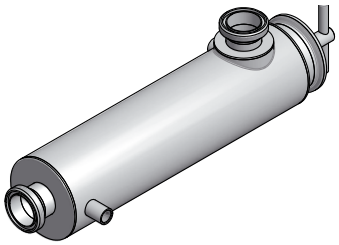

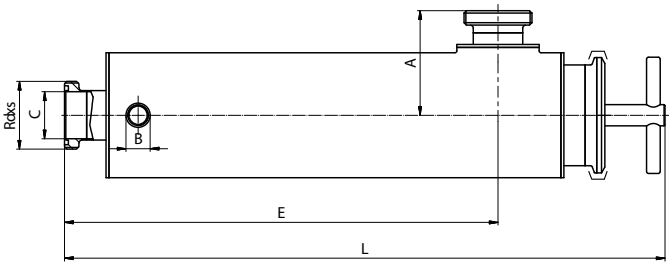

Dimensions

DN	A	B	C	Rdxs	E	L
51	108	1/2"	48,5	70x1/6"	447,5	619,3

CONVERSION TABLE	UMRECHNUNGSTABELLE	
DN	(inch)	(mm)
8	**1/4"**	**6,35**
10	**3/8"**	**9,25**
15	**1/2"**	**12,7**
20	**3/4"**	**19,0**
25	**1"**	**25,4**
32	**1 1/4"**	**31,7**
40	**1 1/2"**	**38,1**
50	**2"**	**51,0**
65	**2 1/2"**	**63,5**
80	**3"**	**76,1**
100	**4"**	**104,0**

BAR CONVERSION CHARTS	BAR UMPRECHNUNGSTABELLE
1 Bar	100000 Pascals
	100 Kilopascals
	1000 Milibars
	1000000 Microbars
	~0,98 Atmospheres
	~401,46 Inches of wather
	10 Meters of wather
	~29,53 Inches of mercury
	~750 Milimeters of mercury
	~14,5 Pounds per square inches
	~1,02 Kilograms per square inches

GENERAL INFORMATION

MATERIALS USED

All units and parts listed in this catalogue are produced from non-corrosive acid-resistant Cr – Ni steel ČSN 17 240, which is the equivalent of the German standard DIN 1.4301. If the corrosion-proof requirements of the parts are higher they are produced from non-corrosive Cr-Ni-Mo steel ČSN 17 349 which conforms to DIN 1.4404.

Chemical composition of the most frequently used non-corrosive steels

ČSN PN	%C max.	%Si max.	%Mn max.	%P max.	%S max.	%Cr max.	%Mo max.	%Ni max.	%Ti max.
17 240	0.07	1.00	2.00	0.045	0.030	17.0-20.0	-	9.0 -11.5	-
17 249	0.03	1.00	2.00	0.045	0.030	17.0-20.0	-	10.0-12.5	-
17 346	0.07	1.00	2.00	0.045	0.030	16.5-18.5	2.0-2.5	10.5-13.5	-
17349	0.03	1.00	2.00	0.045	0.030	16.5-18.5	2.0-2.5	11.0-14.0	-
17 248	0.10	1.00	2.00	0.045	0.030	17.0-19.0	-	9.5-12.0	>=5xC
17 348	0.10	1.00	2.00	0.045	0.030	16.5-18.5	2.0-2.5	11.0-14.0	>=5xC

International standards conversion table for marking steels

Poldi	Czech Rep. PN	Germany DIN (W. Nr.)	USA ASTM	Italy UNI	France AFNOR	Russia GOST
AKV7	17240	1.4301	AISI 304	X5CrNi1810	Z7CN18-09	08Ch18N10
AKV2	17249	1.4306	AISI304L	X2CrNi1811	Z3CN19-121	03Ch18N11
AKV EX7	17346	1.4401	AISI 316	X5CrNiMo1712.2	Z7CND17-12-02	-
AKV EX2	17349	1.4404	AISI 316L	X2CrNiMo1713.2	Z3CND18-12-02	03Ch12N14M2
AKVS7	17248	1.4541	AISI 321	X6CrNiTi1811	Z6CNT18-10	08Ch18N10T
AKV EX S9	17348	1.4571	AISI 316Ti	X6CrNiMoTi1712	Z6CNDT17-12	08Ch17N13M2

DESIGN

The bulk of products are produced from bars or forged material. The material is in such a state that after welding it is not necessary to carry out further treatment. Tubular adapting pipes in their basic finish are pickled – matt, or treated – ground (brushed).

PIPE CONNECTING PARTS – DIN SCREW COUPLINGS

These are produced according to the DIN 11 851 standard and the screw thread according to the DIN 405 (ČSN 01 4037) standard. Connection of the sockets (screw thread or ring) to the tubes can be done in two ways:

a) butt welding
b) flaring the inside diameter

From diameters of 50mm and above it is necessary to ensure flaring of connections with a seam weld. Flared connections with a seam weld are hygienically unobjectionable and are suitable for pressures of 1 MPa (tested at a pressure of 2 MPa). Parts which do not correspond to any standards are produced according to branch or factory standards, and possibly workshop standards, and in some cases to approved technical drawings.

SEALING

Seals listed in this catalogue are produced from the following materials – SILICON, PERBUNAN, EPDM or VITON. They are supplied separately or as part of the set. Prices for tubular adapting pipes and sets of screw couplings do not include sealing rings.

MAINTENANCE

Without exception the materials used are suitable for general use in the food-processing industry. These materials are sensitive to high concentrations of chloride solutions and therefore we recommend that the instructions and recom-mendations of the manufacturer are heeded. Corrosion can only be prevented if these instructions are adhered to.

GENERAL INFORMATION

SPECIAL DESIGN

Apart from the standard parts listed in this catalogue we also supply special designs according to customer requirements and their technical documentation.

INSTRUCTIONS FOR ORDERING

For quick and simple processing of your order please supply the following data:

1	2	3	4
numerical labelling of goods	dimension(DN)	material	amount

If group „3" is not listed in the order we automatically supply material 17 240 (DIN 1.4301)

If you require other parts and units than those in this catalogue please send your specific requirements.

This issue nullifies all previous catalogues and delivery conditions listed in them.

We would be pleased to discuss your specific requirements and answer your questions in person. We look forward to your visit.

Technical Information for Gaskets					
Title	**Silicon** (VMQ silicon rubber)	**EPDM** (ethylene-propylene-diene rubber)	**Viton** (FPM fluorine rubber)	**Perbunan** (NBR nitrile rubber)	**PTFE** (polytetrafluorethylene)
Temperature of use	It is stable in water up to 100 °C Possibility of sterilisation by steam short-term up to 120 °C to 130 °C	Permanent operating use from 40 °C to +140 °C Possibility of sterilisation by steam up to 130 °C	Permanent operating use from 20 °C to +200 °C Possibility of sterilisation by steam short-term up to 130 °C to 140 °C	Permanent operating use from 25 °C to +110 °C Possibility of sterilisation by steam short-term up to 130 °C	Up to +200 °C it is physiologically harmless, use from 200 °C to +260 °C
Recommended use	High temperature load capacity It has good resistance to cold, suitable for food, it has dielectric properties. It has good resistance to alcohols.	It has good resistance to swelling for: • Diluted inorganic and organic acids, media, oxidising media, lyes, and ketones • Hot water and steam up to 130 °C	It has good resistance to swelling for: • Mineral oils • Plant and animal oils • Lubricants (also some additives) • Fuels	It has good resistance to swelling for: • Aliphatic hydrocarbons (such as propane, butane, benzine, mineral oil) • Lubricants based on mineral oil	It has good resistance to swelling in almost all parts It has a smooth and repellent surface so sticking does not occur It has better chemical resistance than in all other elastomers Non-flammable material
Limited use (border)	Shows high swelling for: • Low-molecular esters and ethers • Aliphatic and aromatic hydrocarbons • Concentrated acids and alkali	Cannot be used for: • Plant and animal oils • Aliphatic, aromatic, and chlorinated hydrocarbons • Mineral oils	Shows high swelling for: • Polar solvents, such as acetone, methyl ketone, ethyl acetate, diethyl ether, and dioxane • Low-molecular organic acids (formic acid and acetic acid) • Gaseous ammonia, amines and alkanes • Overheated water steam	Not resistant to: • Polar solvents • Chlorinated hydrocarbons • Ketones • Aromatic hydrocarbons (benzol) • Esters	Not resistant to: • Liquid alkaline metals and some compounds of fluorine in connection with higher pressure and temperature The material does not show the flexibility of rubber.
Material approval	BGA/FDA	BGA/FDA	BGA/FDA	BGA/FDA	BGA/FDA

BGA = approval of the "Federal Health Authority" in Germany ("Bundesgesundheitsamt")
FDA = approval of the "US Food and Drug Administration"

Technische Informationen für Dichtringe					
Name	**Silikon** (VMQ)	**EPDM** (Ethylen-Propylen-Dien-Kautschuk)	**Viton** (FPM)	**Perbunan** (NBR)	**PTFE** (Polytetrafloutäthylen)
Einsatztemperatur	in Wasser bis 100°C beständig Dampfsterilisierbar kurzfristig bis 120°C - 130°C	Dauereinsatz von minus 40°C bis 140°C Dampfsterilisierbar bis 130°C	Dauereinsatz von minus 20°C bis 200°C Dampfsterilisierbar kurzfristig bis 130°C - 140°C	Dauereinsatz von minus 25°C bis 110°C Dampfsterilisierbar kurzfristig bis 130°C	bis 200°C physiologisch unbedenklich, Einsatz von -200°C bis +260°C
typ. Einsatzbereich	hohe thermische Belastbarkeit gute Kältebeständigkeit, für lebensmittel gut geeignet, dielektrische Eigensohaften gute Beständigkeit gegenüber Alkoholen	gute Quellbeständigkeit bei: • verdünnte anorg.- und organische Säuren, Medien, oxidierend wirkende Medien, Laugen und Kentonen • in Heißwasser und Dampf bis130°C	gute Quellbeständigkeit bei: • Mineralölen • pflanzlichen und tierischen Olen • Fetten (auch bestimmte Additive) • Kraftstoffe	gute Quellbeständigkeit • aliphatisohen Kohlenwasserstoffen (wie Propan, Butan, Benzin, Mineralölen) • Fett auf Mineralolbasis	gute Quellbeständigkeit in nahezu allen Teilen Oberfläche glatt und abweisend, dadurch kein Haften von Růckständen chemische Beständigkeit besser als bei allen anderen Elastomeren kaum brennbar
Einsatzgrenzen	hohe Quellung bei: • niedermolekularen Estem und Ethern • aliphatischen und aromatischen Kohlenwasserstoffen • konz. Säuren und Akalien	nicht einzusetzen bei: • pflanzlichen und tierischen Olen • aliphatischen aromatischen und chlorierten kohlenwasserstoffen • Mineralöle	stark quellend bei: • polaren Lösungsmitteln wie Aceton, Methylketon, Ethylacetat, Diethylether u. Dioxane • niedermolekularen organ. Säuren (Ameisen - und Essigsäuren) • Ammoniakgase, Amine u. Alkanien • überhitzter Wasserdampf	nicht beständig bei: • polaren Lösungsmitteln • chlorierten Kohlenwasserstoffen • Ketone • Aromaten (Benzol) • Ester	nicht beständig bei: • flůssigen Alkalimetallen und einigen Flourverbindungen in Verbindung mit hohem Druck und Temperatur kein gummielastischer Werkstoff
Werkstoffzulassung	BGA/FDA	BGA/FDA	BGA/FDA	BGA/FDA	BGA/FDA

BGA = Bundesgesundheitsamt
FDA = US Food and Drug Administration

NIOB FLUID

PRODUCER OF STAINLESS PIPING SYSTEMS

NIOB FLUID s. r. o.
Ostrožská 1003
687 25 Hluk
Czech Republic

Phone: +420 572 419 822 – 8
Fax: +420 572 419 868
E-mail: marketing@niobfluid.cz

www.niobfluid.cz